Easy use

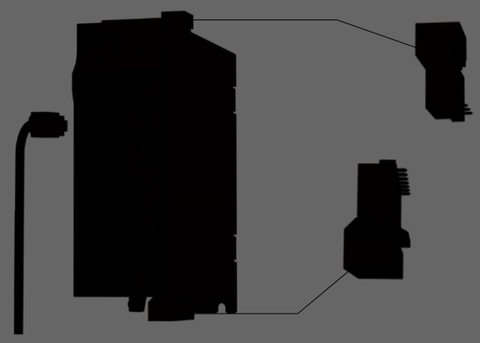

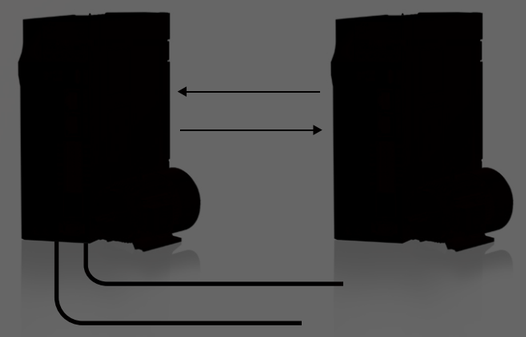

- **DC**

- /

LED/LCD

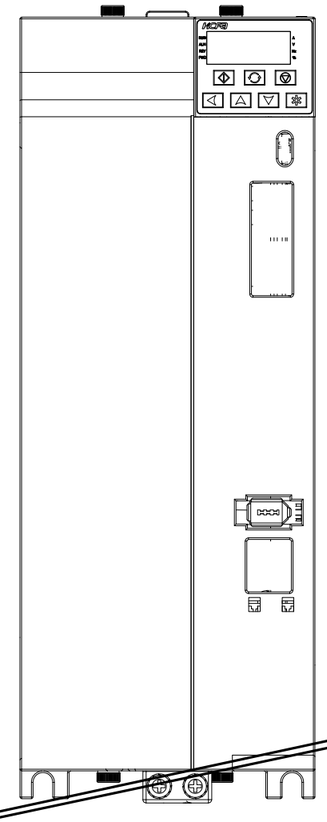
MORE

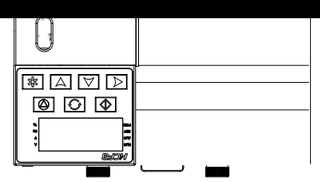

■ E600 AC220V

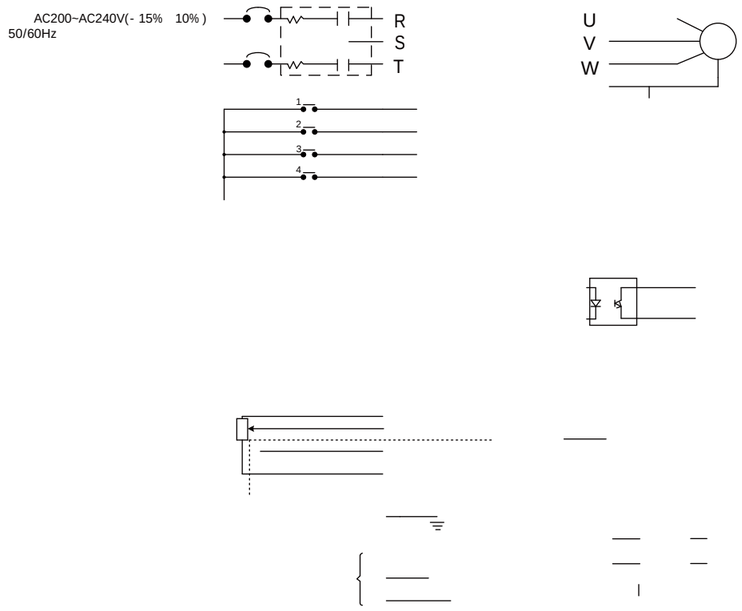

■ E600 AC380V

■ E610 AC220V

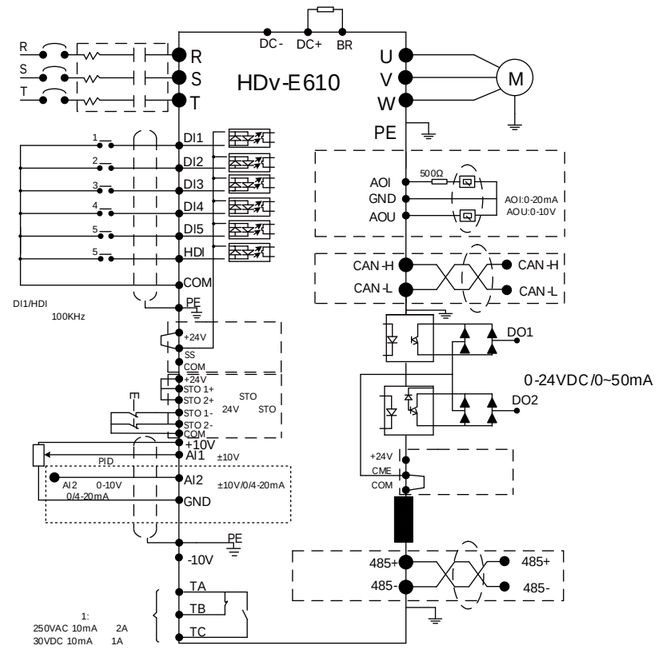

■ E610 AC380V

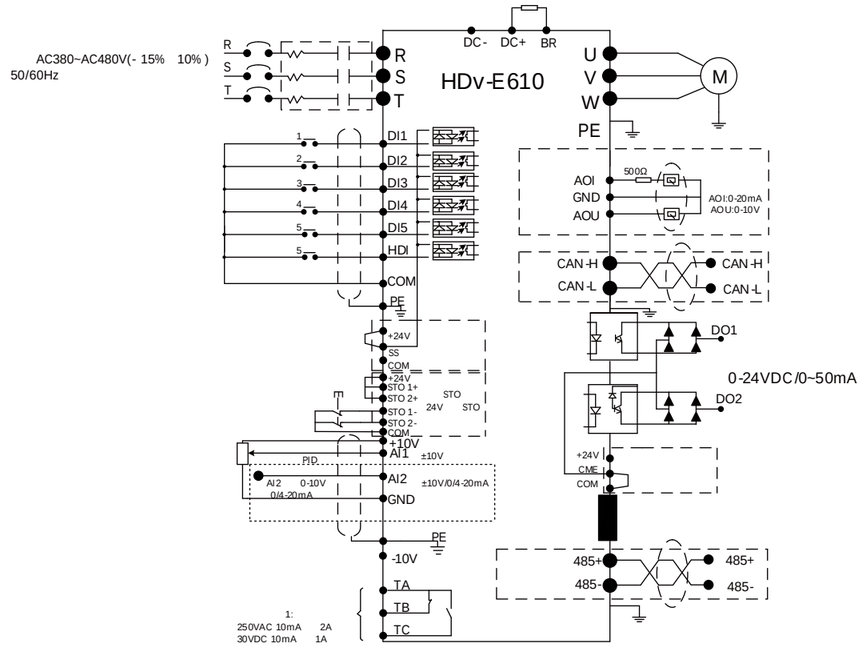

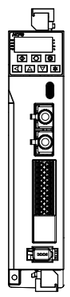

■ **E610 AC380V 400W/750W/1.5kW**

mm

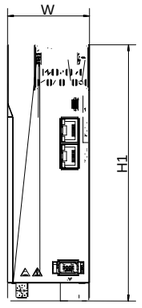

min
20mm

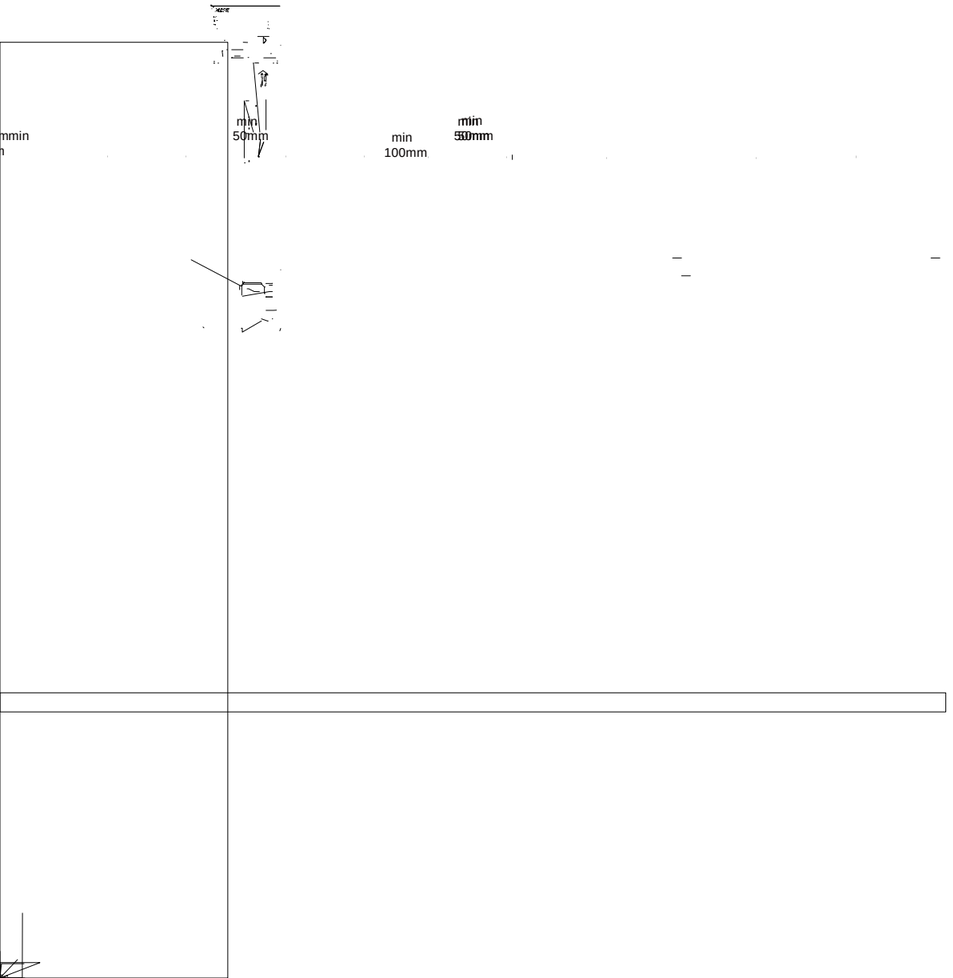

■ **LED**

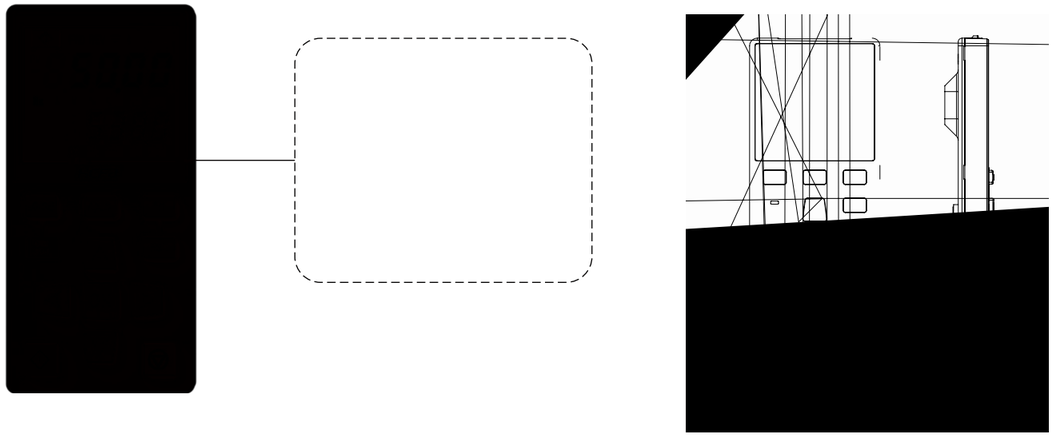

■ **LCD**

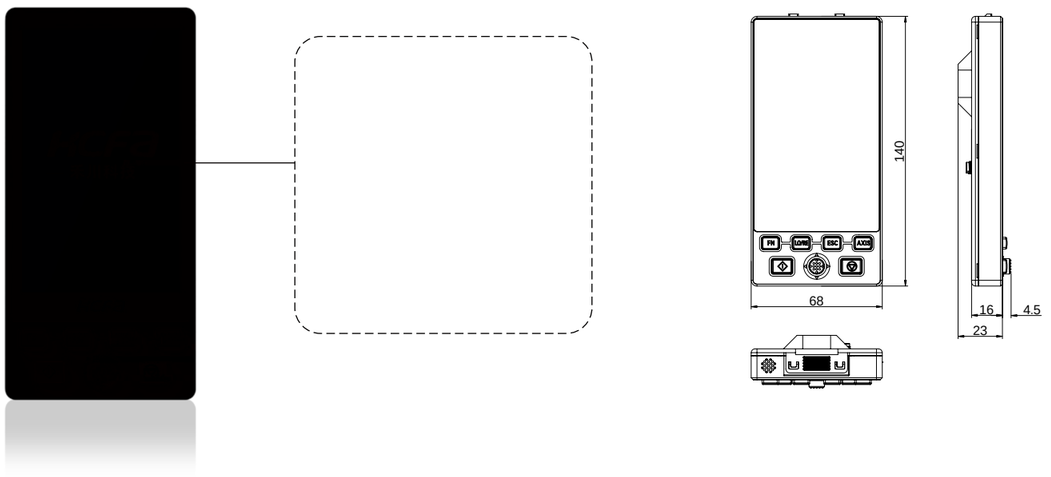

■ EtherCAT

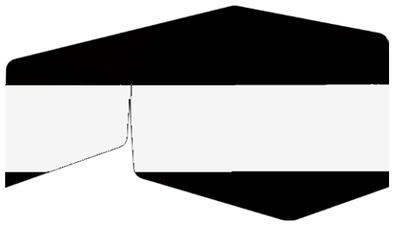

HDv-KC1-ACE-000

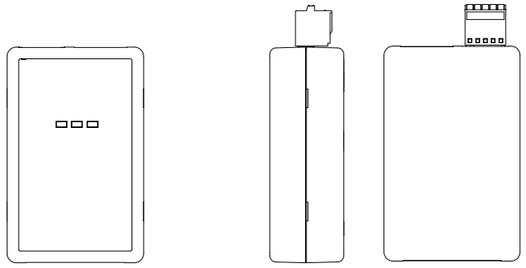

■ EtherCAT

■ HDv-CMC-ECC-000 EtherCAT

E610 EtherCAT

EtherCAT

■ EtherCAT

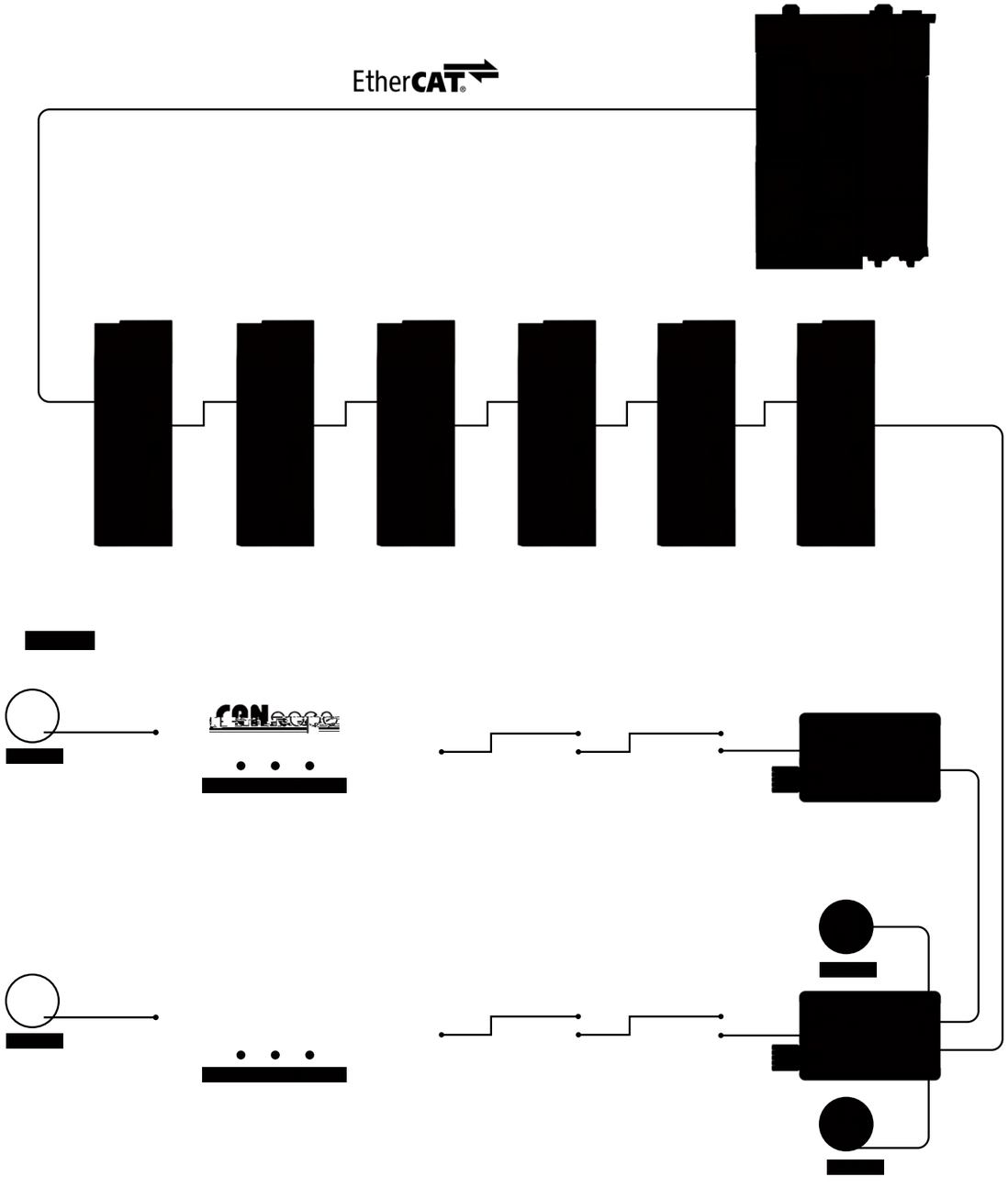

MEMO

Ordering Guide

[redacted]

[redacted]

[redacted]

[redacted]

[redacted]

[redacted]

[redacted]

[redacted]

20%~30%

[redacted]

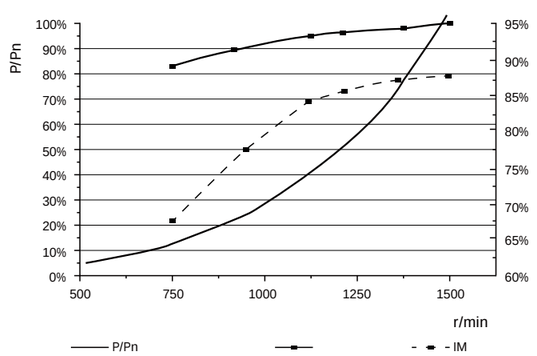

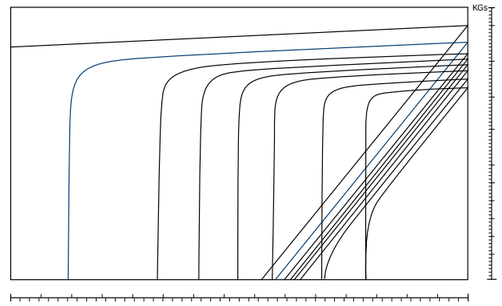

[redacted]

(SynRM) “ ”

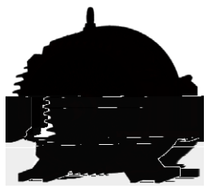

(SynRM)

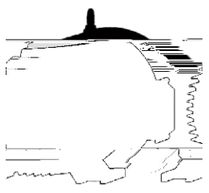

[redacted]

HDv - ME 5 - 112 M 55C 20C B - I B35 T - S F N
⑪ ⑫ ⑬ ⑭

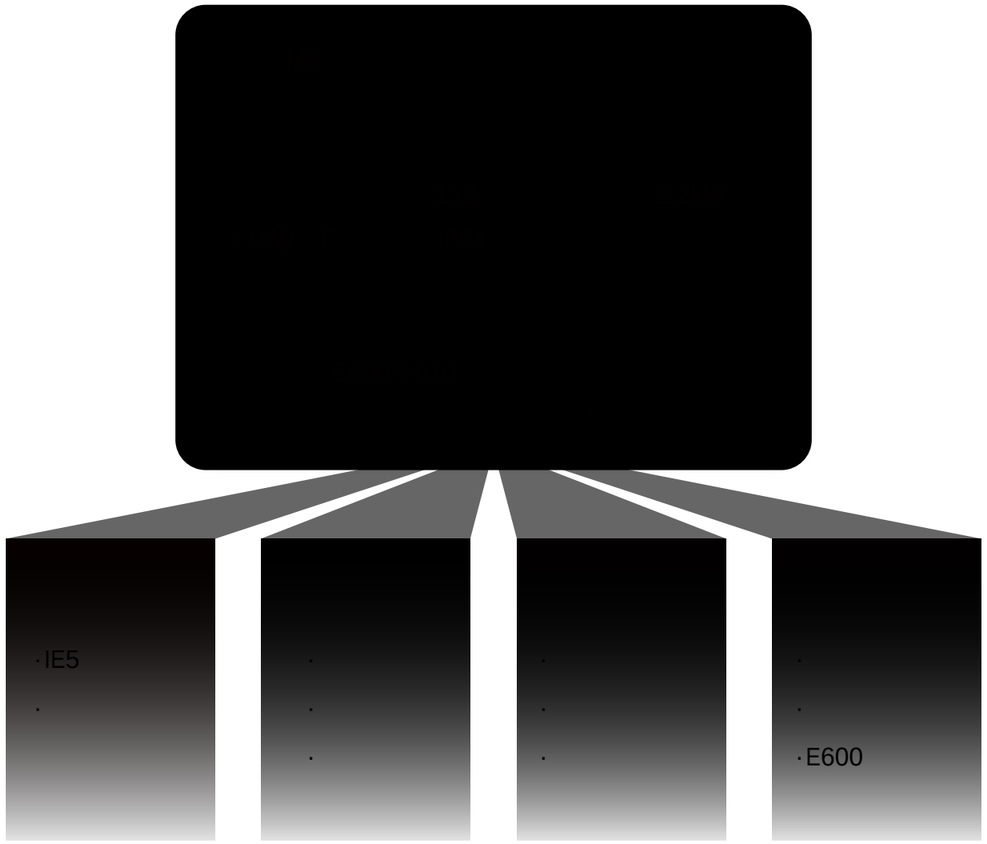

[redacted]

[redacted]