Easy use

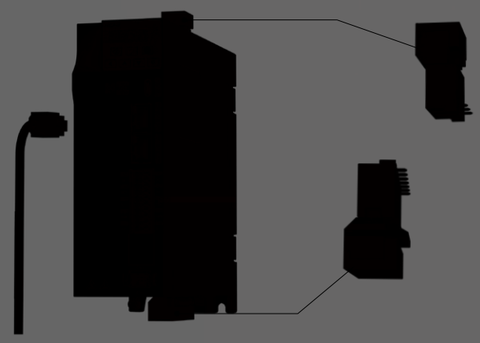

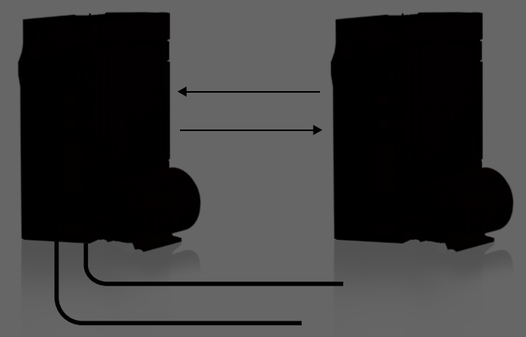

- **DC**

-  /

LED/LCD

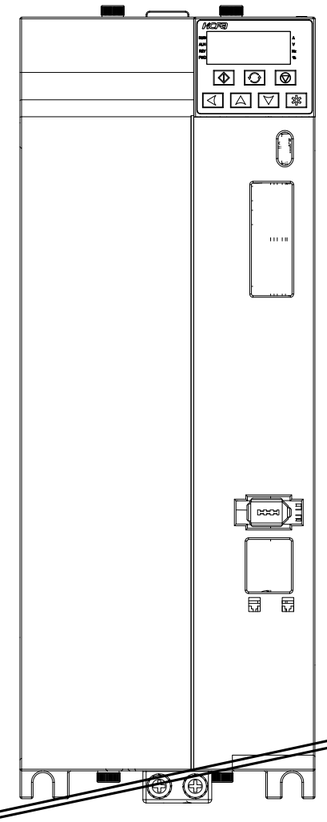
MORE

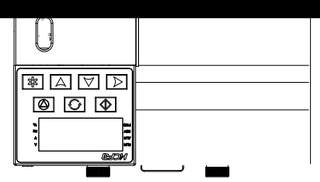

## ■ E600 AC220V

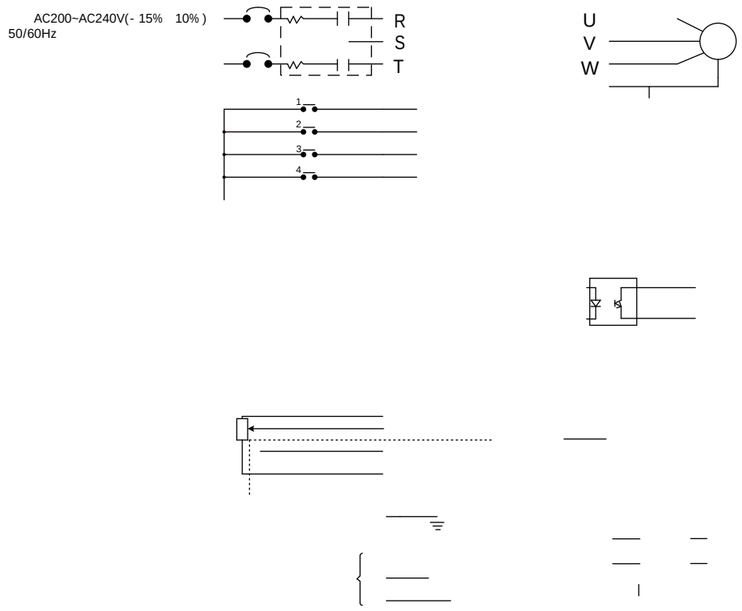


## ■ E600 AC380V

## ■ E610 AC220V

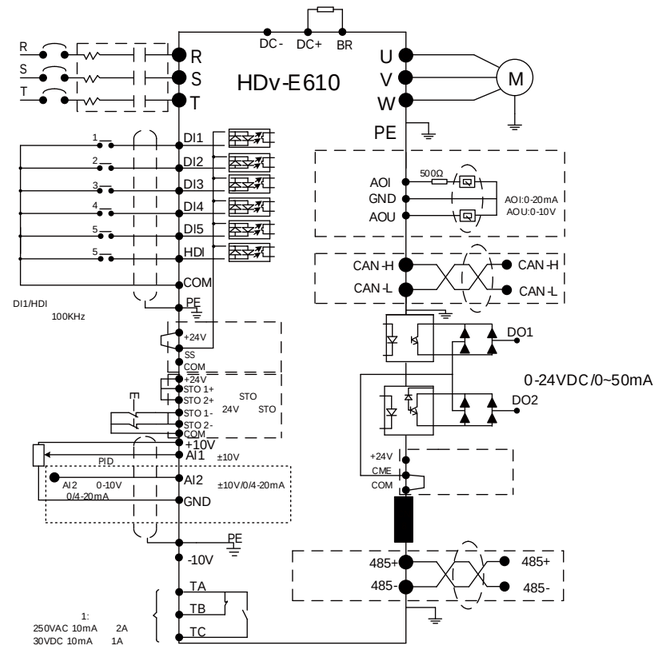


## ■ E610 AC380V

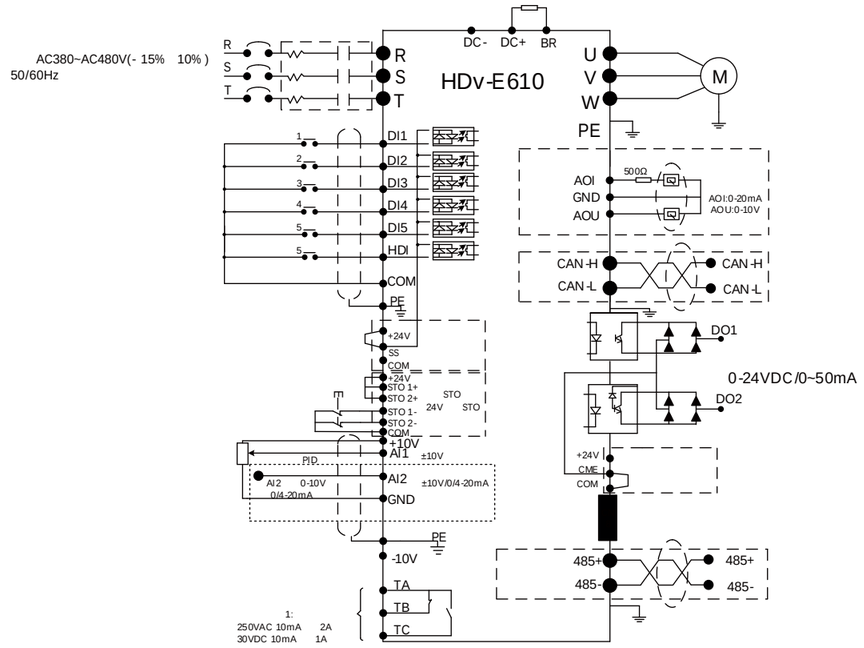

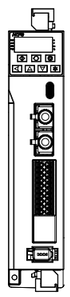

■ **E610 AC380V 400W/750W/1.5kW**

mm

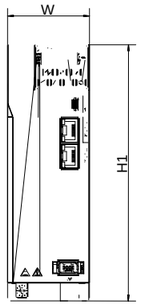

min
20mm

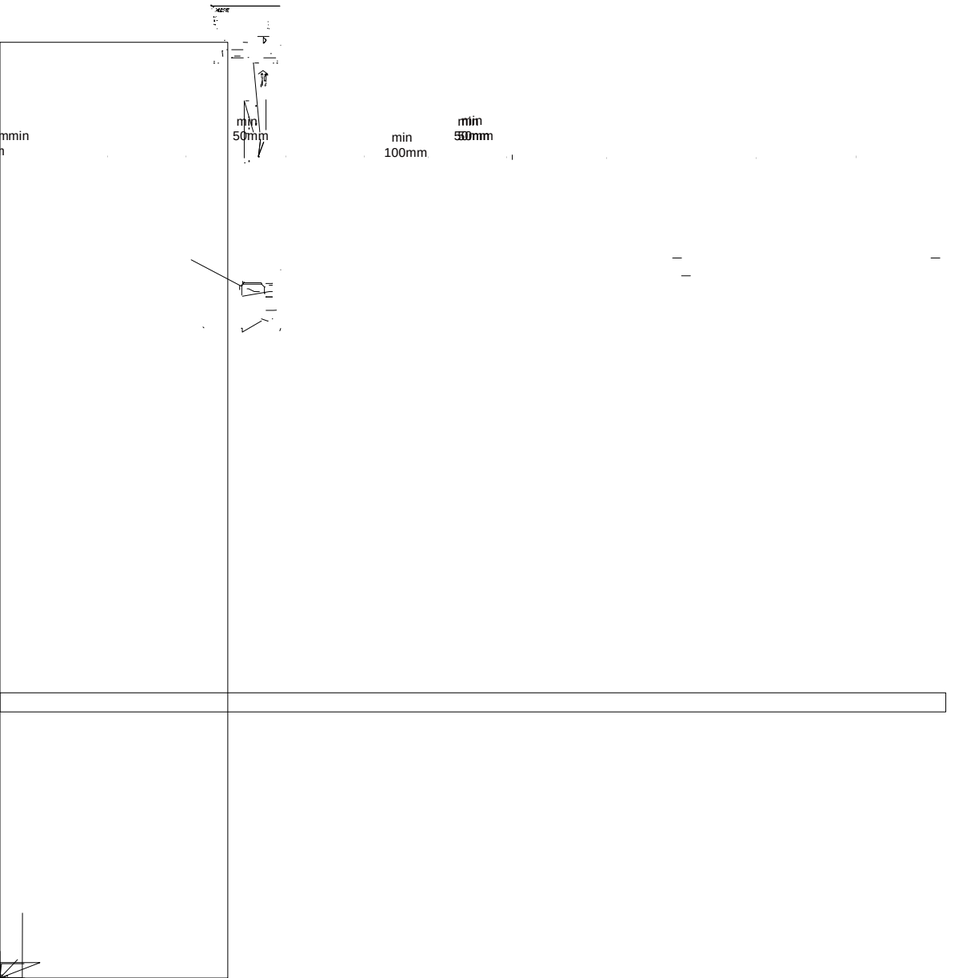


■ **LED**

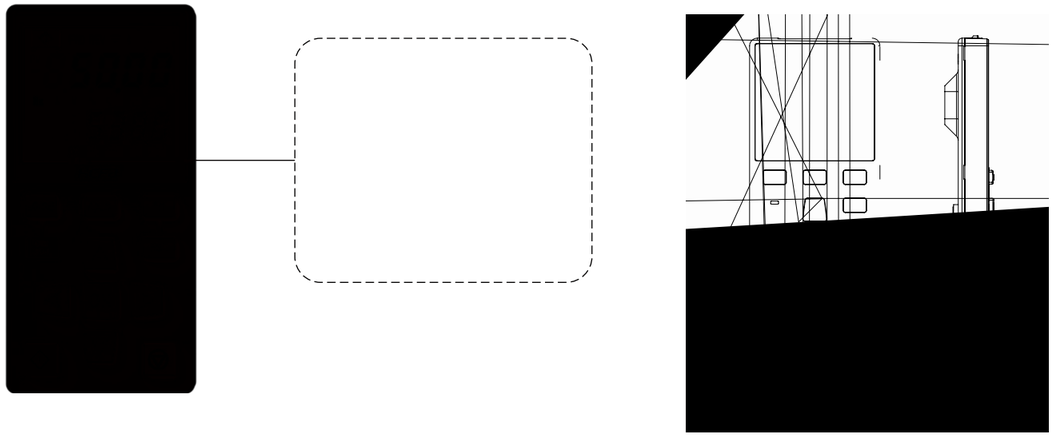

■ **LCD**

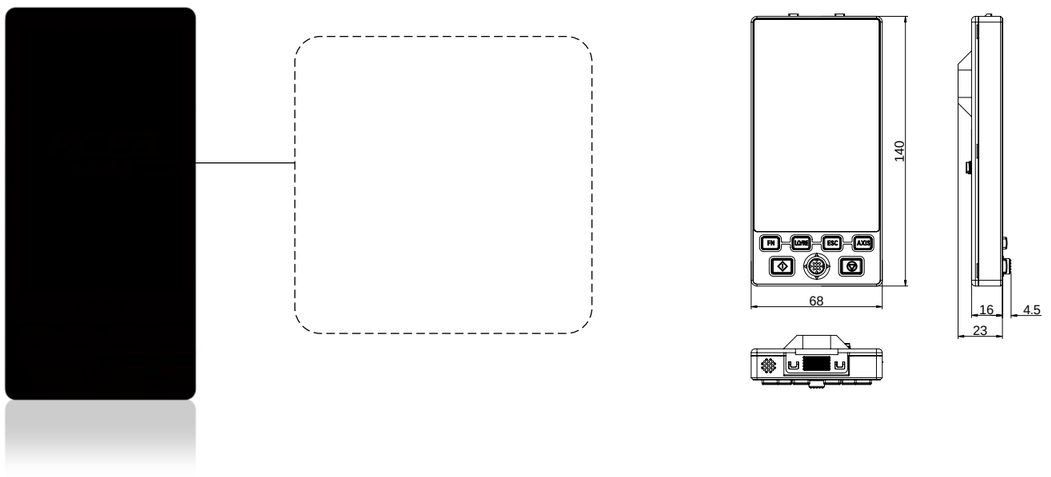

## ■ EtherCAT

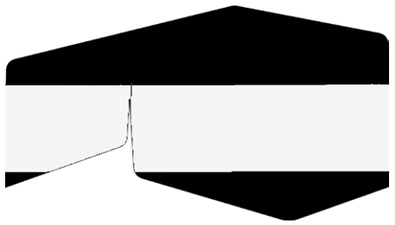

HDv-KC1-ACE-000

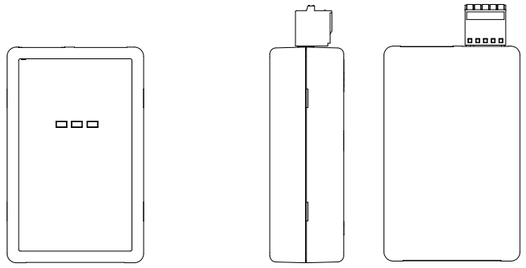

## ■ EtherCAT

■ HDv-CMC-ECC-000 EtherCAT

E610 EtherCAT

EtherCAT

## ■ EtherCAT

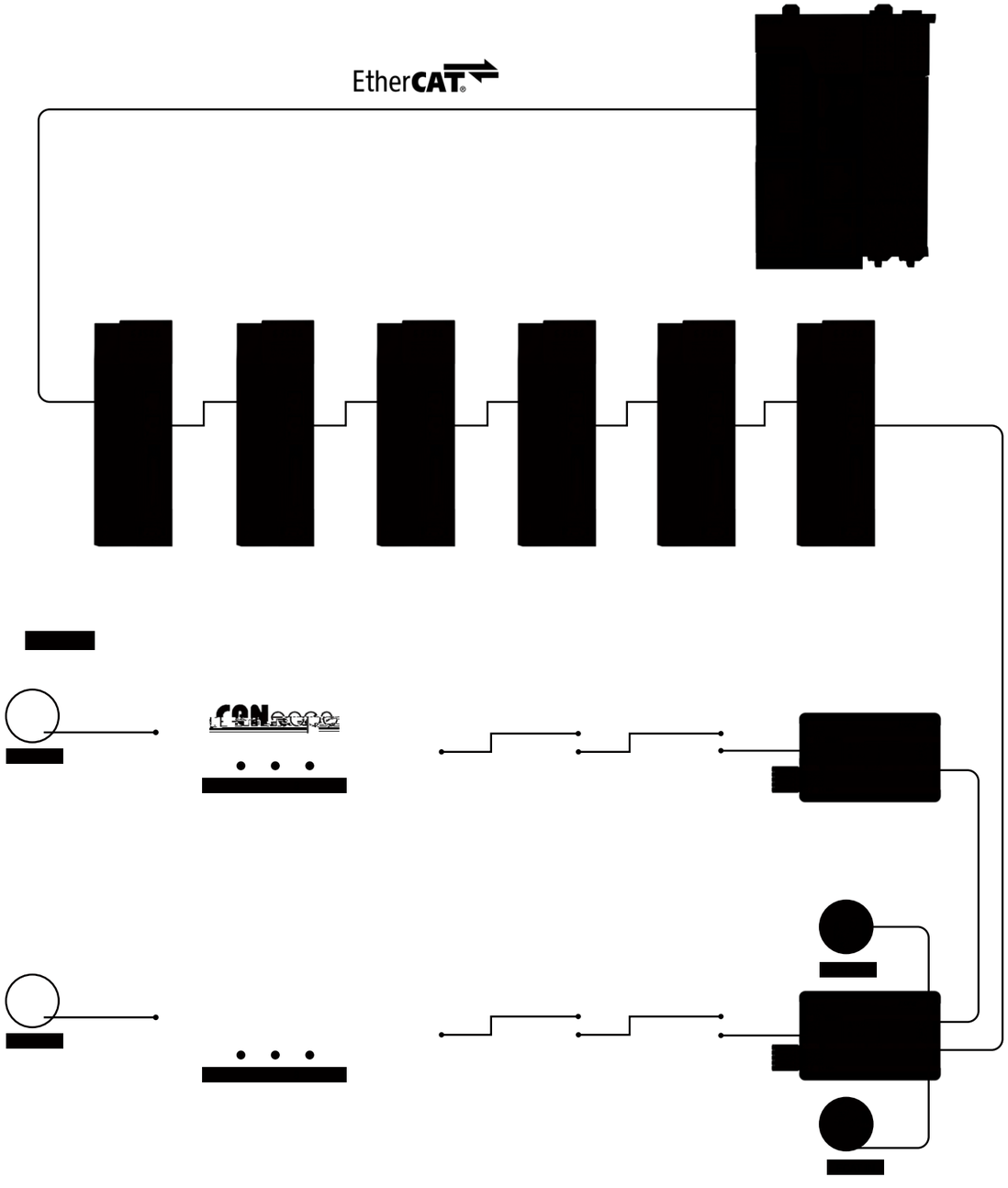

# MEMO

# Ordering Guide

[redacted]

[redacted]

[redacted]

[redacted]

[redacted]

[redacted]

[redacted]

[redacted]

20%~30%

[redacted]

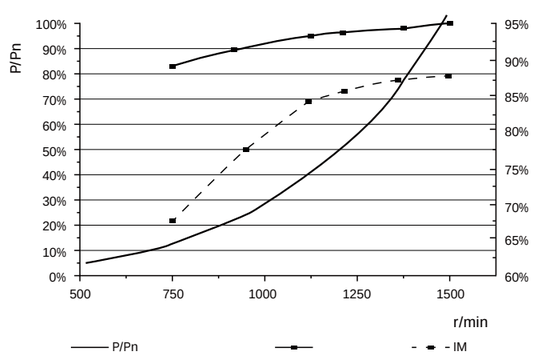


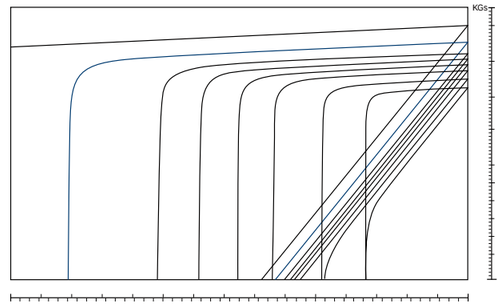


[redacted]

(SynRM) “ ”

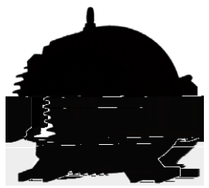

(SynRM)

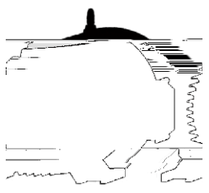

[redacted]

**HDv - ME 5 - 112 M 55C 20C B - I B35 T - S F N**
⑪ ⑫ ⑬ ⑭

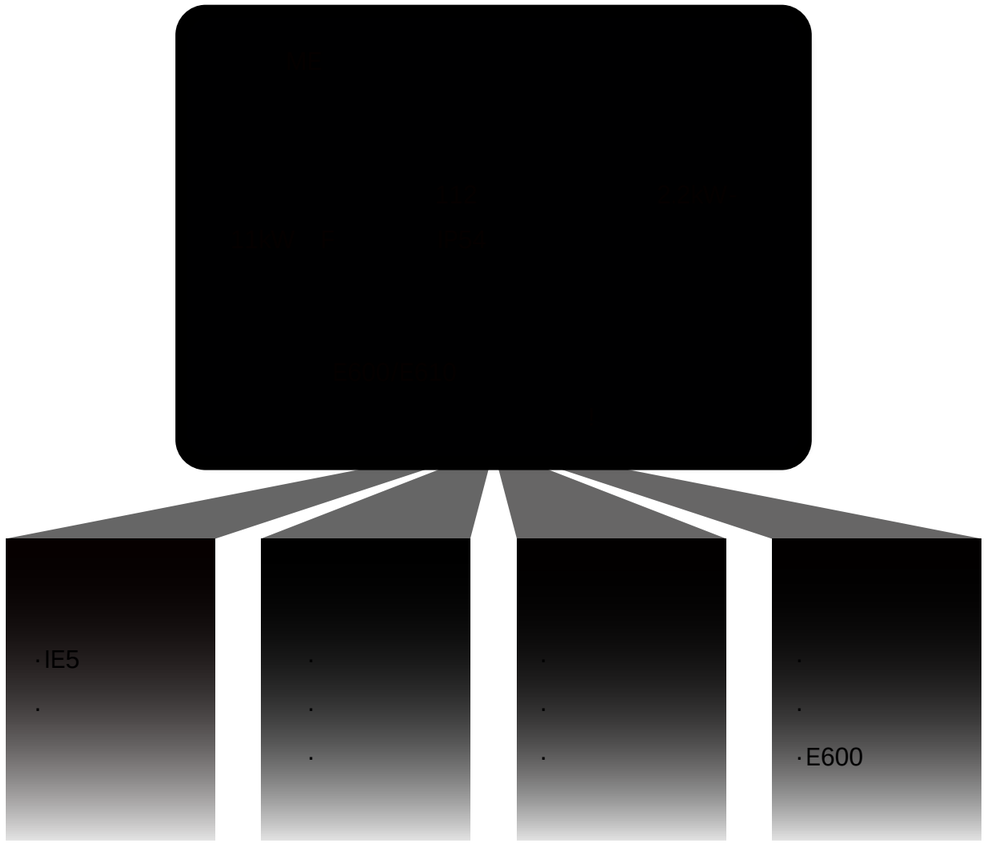

[redacted]

[redacted]