-
-
-
-
-
-
-
-
-

2.1		

■

	SCARA
	...

..... 1
1.1 2
1.2 2
1.3 3

SCARA IO

1.1

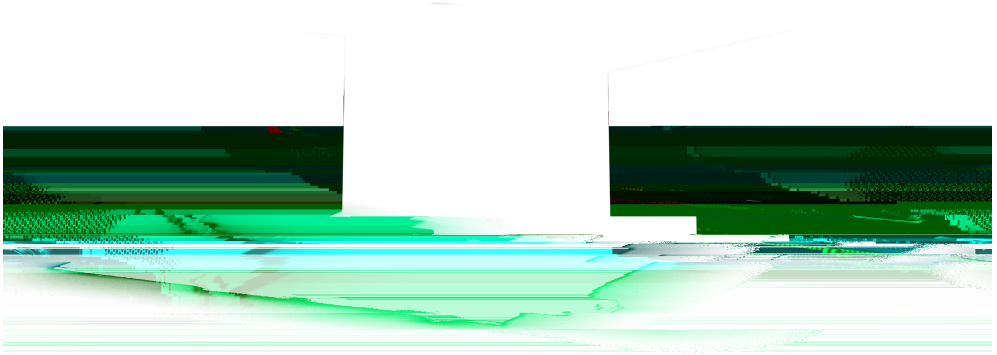

1-1

1.2

1-2

1-1

	S/N P/N

1.3

1	
HRC	

2	
2	

3	
A	220V
S	220V
T	380V

4	
J	J3
X	X3
Y	Y7

6	
-	
F	
M	

- 1.
  2.

..... 4

2.1 5

2.1

2-1

2-1

kg	3	6	10	20

..... 6
3.1 7
3.2 7
3.3 7

3.1

1.
2.

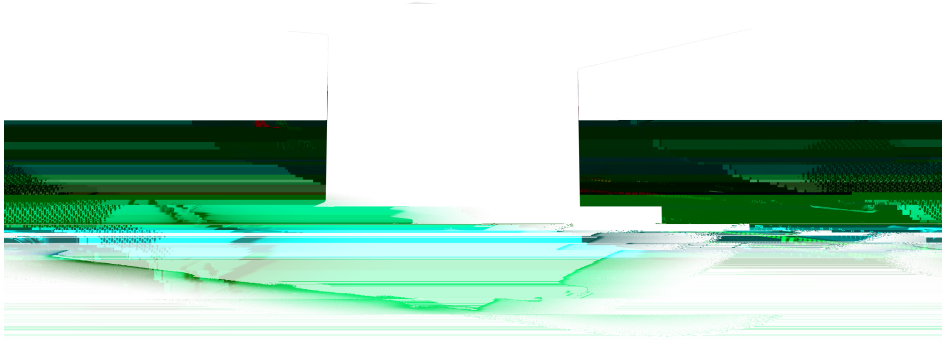

3-1

3.2

1. -20ºC +65ºC
2. 0% 90%
3.

3.3

1.
2.
3.
4.

1. 0ºC 55ºC
2.
3.
4.
5.
6.

..... 8

1.

NC

2.

3.

..... 10

5.1 12

5.2 12

5.3 13

5.3.1 13

5.3.2 EtherCAT 13

5.3.3 EtherNet 14

5.3.4 RS485/RS232 14

5.3.5 15

5.3.6 15

5.3.7 16

5.3.8 17

5.3.9 IO 18

...

⚠	
	DC AC
	U V W 10

/

IO

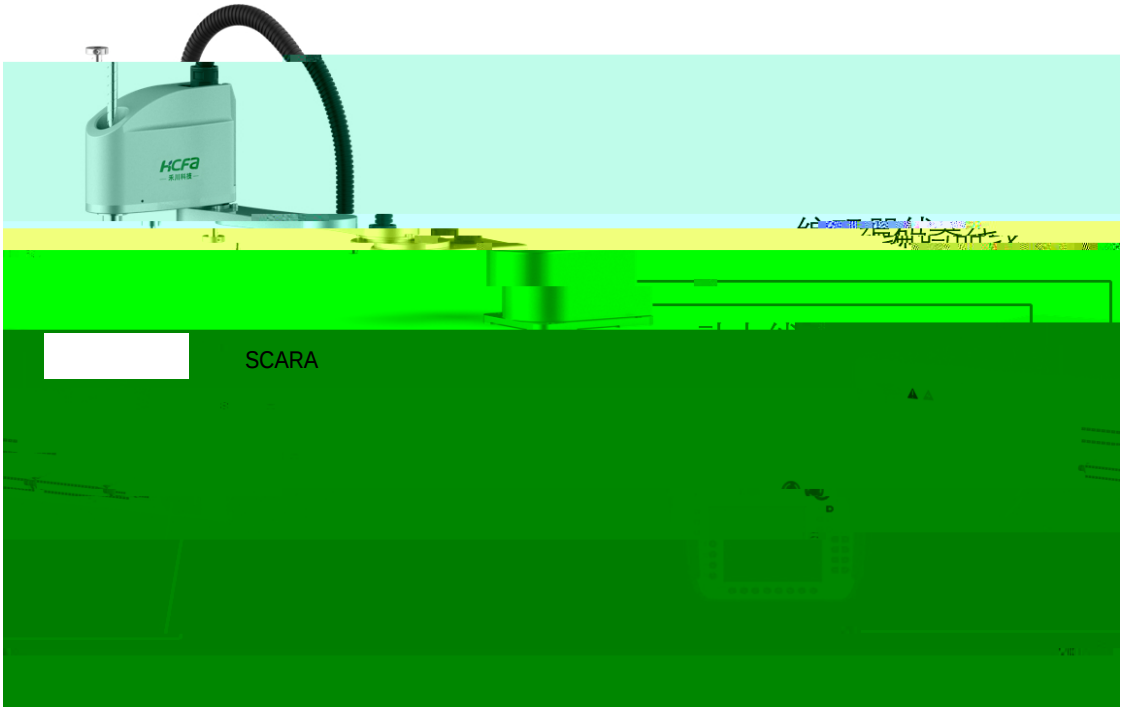

5-1

5.1

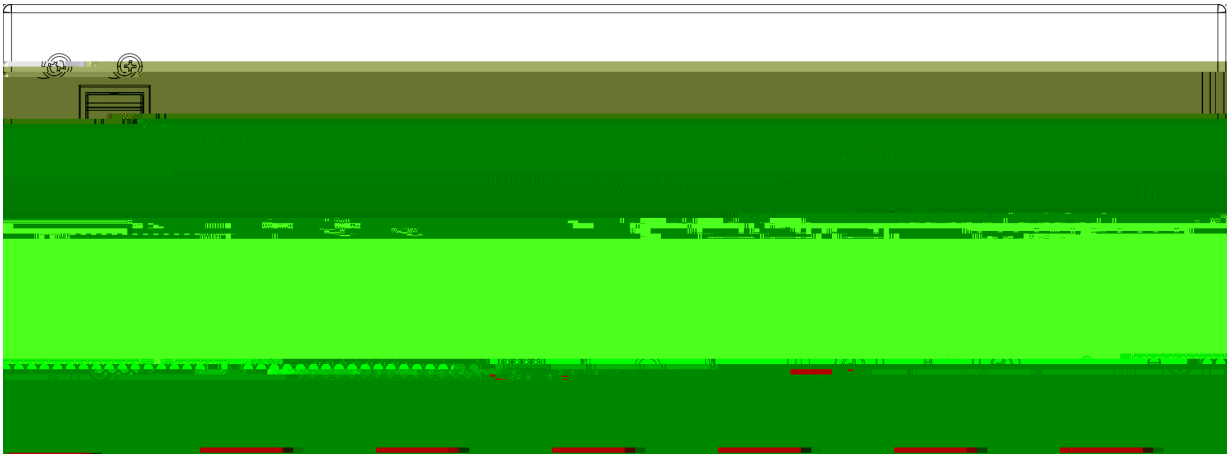

5-2

5-1

5.2

1.

MOTOR

ENC

2.

TP

3.

AC220V 16A

1 "L" 2 "N" 3 "PE" PE

4. IO

IO

PNP NPN

NPN

5.

5.3

5.3.1

200-240V 50/60HZ 1.5mm²

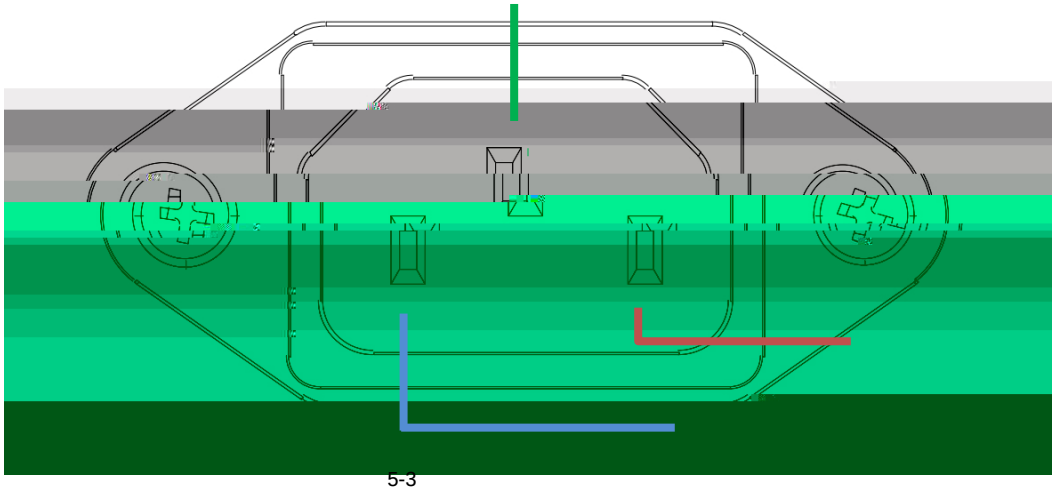

5-3

5-2

1	L	AC220V
2	N	
3	PE	

5.3.2 EtherCAT

EtherCAT RJ45 8 100M, IO
8

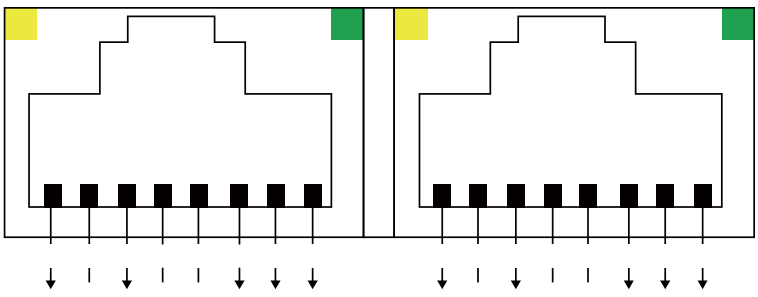

5-4 EtherCAT

5-3 EtherCAT

1	TX+	+	5		—
2	TX-	-	6	RX-	-
3	RX+	+	7		—
4		—	8	GND	

5.3.3 EtherNet

EtherNet/IP TCP/UDP IEEE802.3U
/ /PLC/ EtherNet/IP
I/O

5-4 EtherNet

1	TXP	+	5		—
2	TXN	-	6	RXN	-
3	RXP	+	7		—
4		—	8	GND	

5.3.4 RS485/RS232

RS485/232 4800-115200 RS485 500 32
RS232 15 RS232 1 5

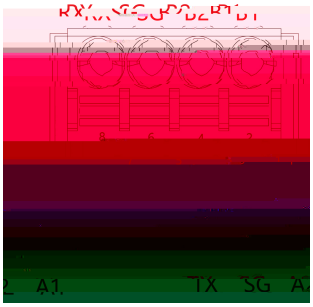

5-5 RS485/232

5.3.5

SCARA “ ”

5-6 TP

1	EtherNet TX+	+	9	A	A
2	EtherNet TX-	-	10	24V	24V
3	EtherNet RX+	+	11	24V	24V
4	EtherNet RX-	-	12	0V	0V
5	COM		13	0V	0V
6	NO		14	PE	
7	NC		15	ST2	2
8	B	B	16	ST1	1

5.

5-7 ENC

			13	J3D+	J3 +
			17	J1-J2屏蔽线	J1-J2
5	J3-J4屏蔽线	J3-J4	18	J2GND	J2 -
6	J4GND	J3 -	19	J2BAT+ J	J2 +
7	J4BAT+	J4	20	J2D-	J2 +
8	J4D-	J4 +	21		4

5.3.8

24V

SS

DC24V +20%~-15% 4.86K Ω 7mA/DC24V, 5KHz, 0.1ms 1.5KVrms

NPN 0.25A/ 5KHz 0.1ms 1.5KVrms

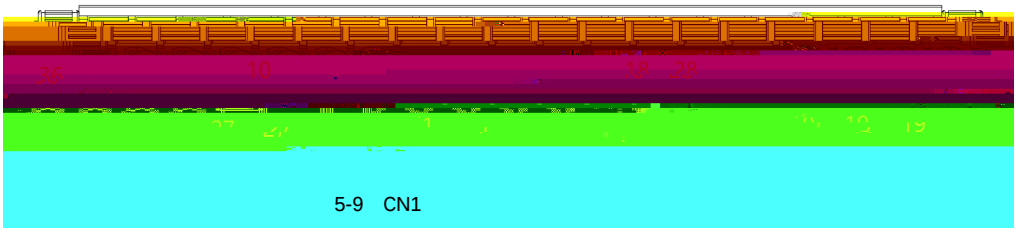

5-9 CN1

5-9 CN1

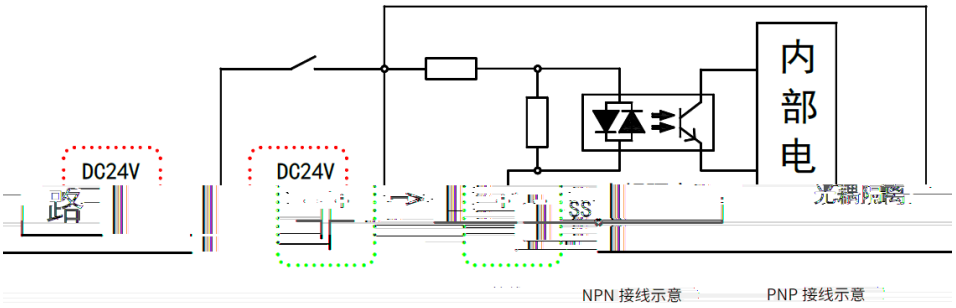

5-10 CN1

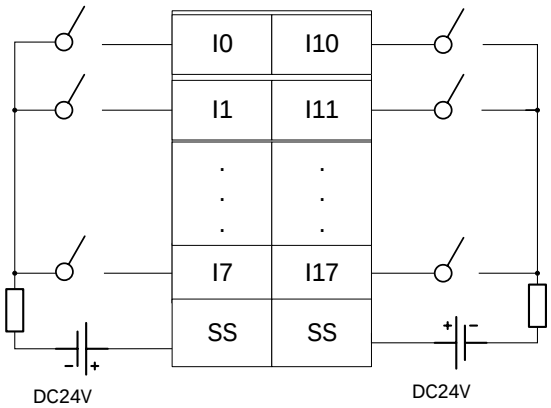

5-12 CN1

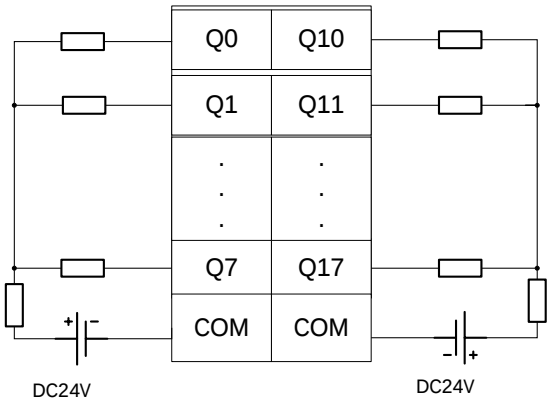

5-13 CN1

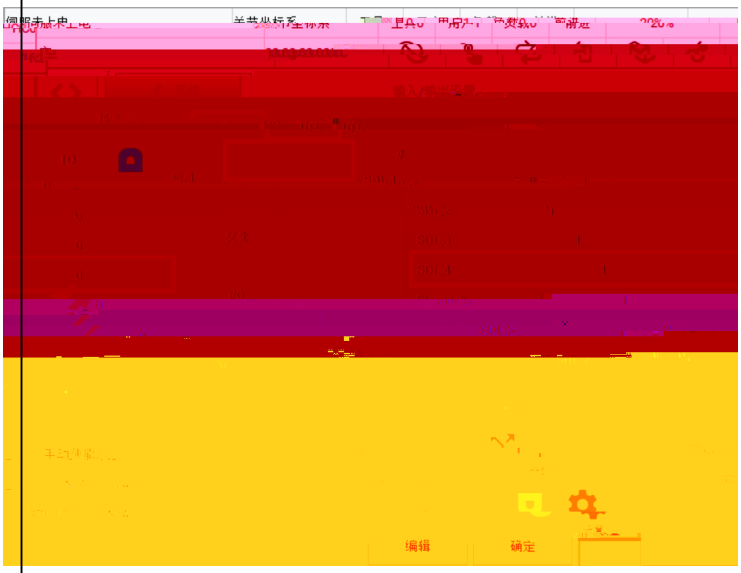

5-14

..... 19
6.1 20
6.2 20

È IJ ɔ - í 1 ′O ° - È IJƺɔ - F ط ɛ ﻭﻱ Œ

RP" BGRVÀ

..... 21
7.1 22
7.2 22

7.1

重 要

- Err.097
- 3.0V Err.015 15 3.0V
- Err.012 2.7 V
- 5
- 7-1

7-1

	SV-ENC-BAT
	3.6V
	2.7Ah
(D x H)	17 mm x 55 mm
	25g

7.2

1

2

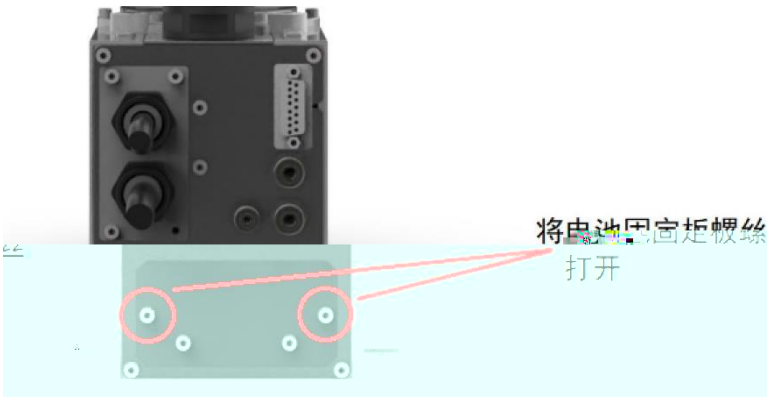

3

4 “L”

5 4 “L”

6

7